Empulse F55 Compatibility Guide

RevB.:06/2021

Wheelchair brand / model	Docking	Wheelchair brand / model	Docking
Sunrise Medical		**Meyra**	
Nitrum	B	Hurricane (Box)	A
Nitrum Hybrid	B	Hurricane S	A
Helium	B	Nano	A
Xenon²	B	Smart F	A
Xenon² Hybrid	B		
Xenon² SA	D	**RGK**	
Argon²	A	Tiga	A
Neon²	A	Tiga Sub 4	A
Easy 200	A	Tiga FX	A
Easy 300 SA	A		
Easy Life R	A	**KI Mobility**	
Easy Life F	A	Rogue	E
Easy Life SA	A	Tsunami	E
Easy Life T	A	Ethos	A
Easy Life T SA	A		
Easy Life RT	A	**BEROLLKA**	
Easy Life i SA	A	Phoenix	A
Easy max	A	Luke SLT	A
Easy max SA	A	Luke AR	A
		Slade SLT	A
PROGEO		Slade AR	A
Ego	C	Sprint SLT	A
Exelle	C	Sprint AR	A
Exelle Vario	C	Fitness	A
Joker R2	C	Fitness HEMI Spezial	A
Joker Energy	C		
Tekna Advance	C		

Please note: The above list is an indication of wheelchair models the F55 can be mounted on. However, frame shape, CoG, wheel-size and seat-depth are of influence. Additionally, a straight section of the frame tube of at least 35 mm is also necessary for the attachment of the clamps. Therefore it is essential to try and test it to be 100% sure! Or ask your supplier for advice.
The compatibility guide only shows wheelchairs with a signed combination agreement. Find docking information on the next page. For potential No-go's with Sunrise Medical wheelchairs please refer to the appropriate wheelchair Order Form.

Wheelchair brand / model	Docking	Wheelchair brand / model	Docking
Pro Activ			
Traveler	**A**		
Speedy	**A**		
Buddy	**A**		

Please note: The above list is an indication of wheelchair models the F55 can be mounted on. However, frame shape, CoG, wheel-size and seat-depth are of influence. Additionally, a straight section of the frame tube of at least 35 mm is also necessary for the attachment of the clamps. Therefore it is essential to try and test it to be 100% sure! Or ask your supplier for advice.
The compatibility guide only shows wheelchairs with a signed combination agreement. Find docking information on the next page. For potential No-go's with Sunrise Medical wheelchairs please refer to the appropriate wheelchair Order Form.

Empulse F55
Docking Information

The F55 easily fits on almost all common manual folding and rigid wheelchairs with the following dimensions:

Box and open frame or similiar frame type with round tubes diameter (19.5 mm, 23 mm, 25 mm, 28.6 mm & 30 mm) or oval tube (Xenon², Helium). Additional special clamps are available, please refer to the combination overview and the following description.

Mounting position: Optimal angle of the F55 to the ground is 80°. For optimal performance, it is recommended not to fall below the following minimum mounting heights (measured from floor to bottom edge of the clamp):
8.5" FF - 240 mm / 8.5" SA - 200 mm
14" FF - 360 mm / 14" SA - 320 mm

Frame width measured from the center of the frame tube to the center of the frame tube at mounting position.
- Possible mounting range from 260 mm to 480 mm measured frame width
- If there is an inset, the mounting position of the clamps must be below the bend
- Measured width differs from the seat width due to the measuring method or frame version (inset, V indentation, ab- or adduction, etc.)
- Use only the measured dimension and not the seat width to check the compatibility.

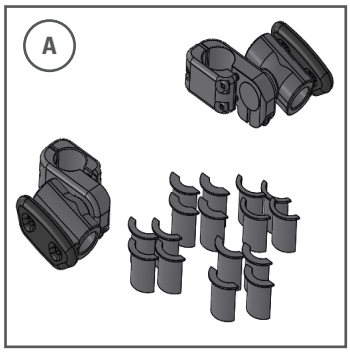

Version A
Suitable for round tube with 19.5 mm, 23 mm, 25 mm, 28.6 mm & 30 mm diameters. Adaptable through inserts included in delivery.

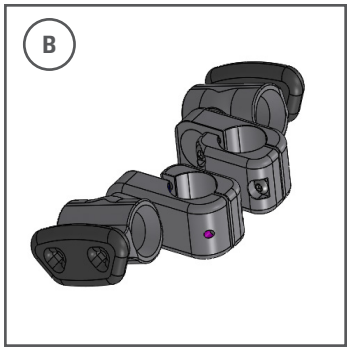

Version B
Oval tube for Xenon², Xenon² Hybrid & Helium.

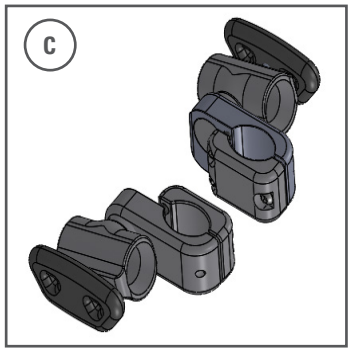

Version C
For Progeo oval tube frame (not in combination with V frame).

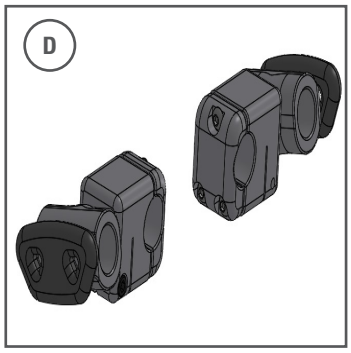

Version D
Suitable for Xenon² SA.

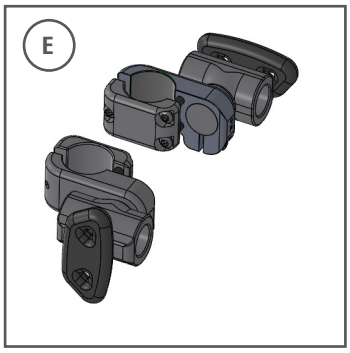

Version E
35.5 mm, suitable for KI-Mobility Rogue and Tsunami.